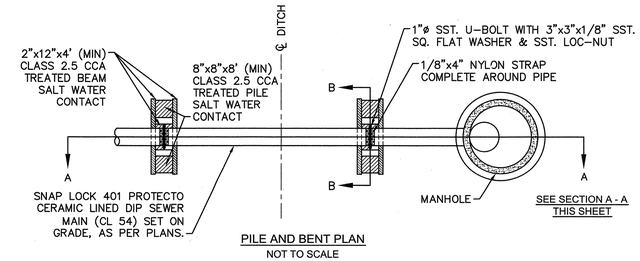

PILE AND BENT PLAN

NOT TO SCALE

NOTES:
1. PILES AND PILE DRIVING SHALL CONFORM TO NCDOT STANDARD SPECIFICATIONS FOR ROADS AND STRUCTURES, JANUARY 2002, SECTIONS 445, 450, 1082-2 & 1084-2.
2. CENTERLINE OF BOLTS TO BE A MINIMUM OF 3" FROM OUTSIDE EDGE OF TIMBER. BOLTS TO BE A MINIMUM OF 3" CENTERLINE TO CENTERLINE.
3. ALL STAINLESS STEEL SHALL BE 316. STAINLESS STRAP TO BE COLD FORMED.
4. PILE SHALL NOT OBSTRUCT FLOW OR CAUSE EROSION OF DITCH/STREAM BANK.
5. MIN. CLASS 54 DIP-ENGINEER MUST DESIGN LOADING.
6. DESIGN SHALL BE APPROVED BY CFPUA.

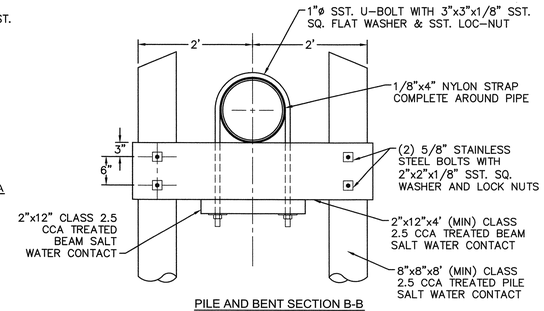

PILE AND BENT SECTION B-B

NOT TO SCALE

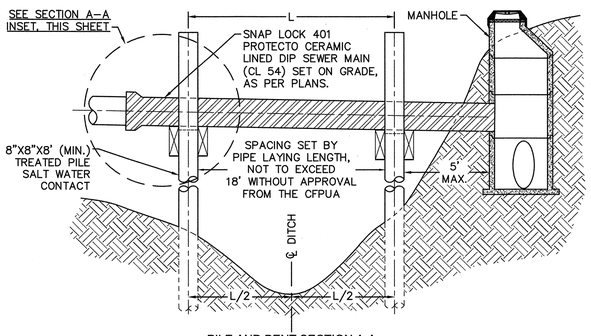

PILE AND BENT SECTION A-A

NOT TO SCALE

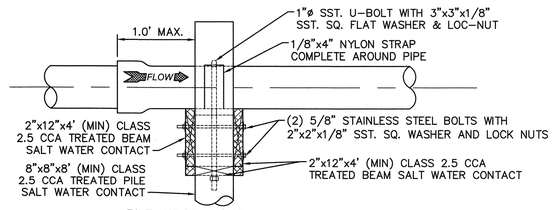

PILE AND BENT SECTION A-A INSET

NOT TO SCALE

PILE AND BENT DETAIL

NOT TO SCALE

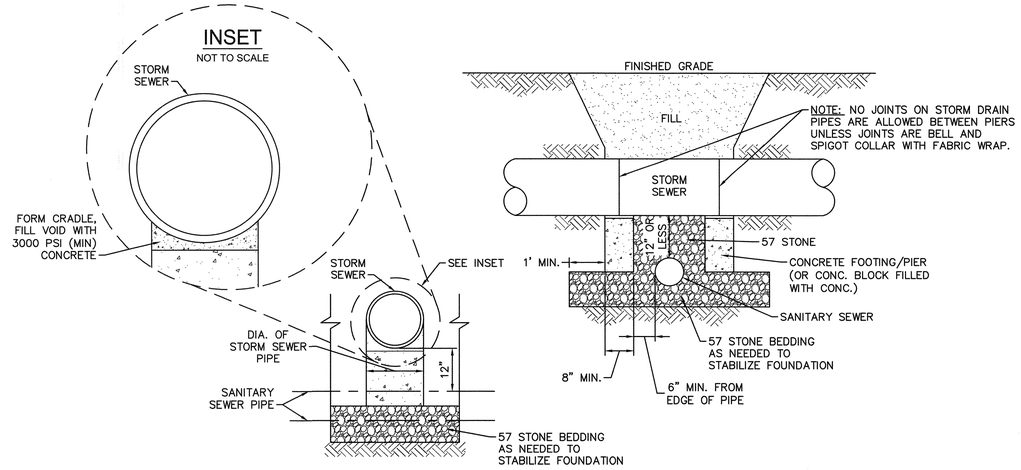

STRUCTURAL BRIDGING DETAIL FOR STORMWATER OVER GRAVITY SEWER INSTALLATIONS WITH LESS THAN 12" SEPARATION

NOT TO SCALE

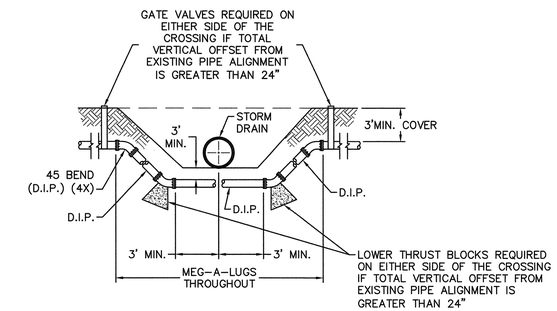

NOTE: USE D.I.P. (CL50 OR BETTER)

FORCE MAIN DITCH AND STORM DRAIN CROSSING

NOT TO SCALE

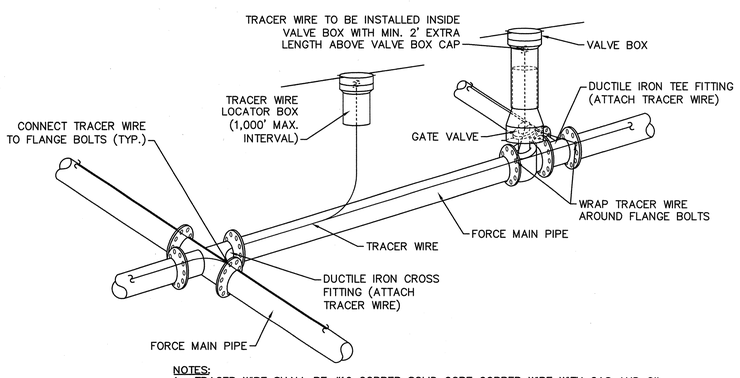

NOTES:
1. TRACER WIRE SHALL BE #10 COPPER SOLID CORE COPPER WIRE WITH GAS AND OIL RESISTANT INSULATION
2. WIRE SHALL BE STRAPPED TO ALL PVC FORCE MAIN PIPING WITH DUCT TAPE AT 12-FT. INTERVALS.
3. SECURE WIRE TO ALL TEE AND CROSS FITTINGS.
4. ALL WIRE SPLICES SHALL HAVE WATER PROOF WIRE CONNECTIONS.

TRACER WIRE DETAIL

NOT TO SCALE

GENERAL NOTES:
1. NO EXCAVATED MATERIAL SHALL BE PLACED IN ANY STREAM, DITCH OR DRAINAGE-WAY.
2. THE CONTRACTOR IS RESPONSIBLE FOR LOCATING ALL UNDERGROUND UTILITIES BEFORE ANY CONSTRUCTION BEGINS.
3. THE CONTRACTOR IS RESPONSIBLE FOR TEMPORARY SEDIMENT AND EROSION CONTROL MEASURES WHILE CONSTRUCTION IS IN PROGRESS.
4. THE CONTRACTOR IS RESPONSIBLE FOR STABILIZATION OF ALL DISTURBED AREAS.
5. THE CONTRACTOR IS RESPONSIBLE FOR LAY DOWN AND STOCKPILE AREAS (TO ARRANGE AND ENSURE COMPLIANCE WITH ALL LOCAL AND STATE REGULATIONS).

THE DETAILS SHOWN HEREON SUPERCEDE CFPUA WRITTEN TECHNICAL SPECIFICATIONS VERSIONS 1.00 - 1.04

REV:	DESCRIPTION:	DATE:

NORTH CAROLINA PROFESSIONAL ENGINEER SEAL 035107 NICHOLAS J. LAURITTA
04/08/15

CFPUA SANITARY SEWER

STANDARD DETAILS

CAPE FEAR PUBLIC UTILITY AUTHORITY
235 GOVERNMENT CENTER DRIVE
WILMINGTON, NC 28403
OFFICE: (910)332-6560
Stewardship. Sustainability. Service.

DATE: 1/9/12
SCALE: N/A
DRAWN BY: CFPUA
CHECKED BY: CFPUA
PROJECT NO. :

SHEET NO: SSD-3