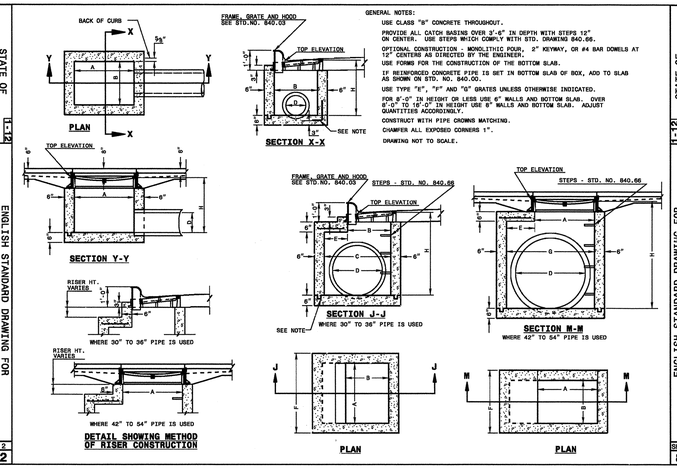

GENERAL NOTES:

USE CLASS "B" CONCRETE THROUGHOUT.

PROVIDE ALL CATCH BASINS OVER 3'-6" IN DEPTH WITH STEPS 12" ON CENTER. USE STEPS WHICH COMPLY WITH STD. DRAWING 840.66.

OPTIONAL CONSTRUCTION - MONOLITHIC POUR. 3" KEYWAY, OR #4 BAR DOWELS AT 12" CENTERS AS DIRECTED BY THE ENGINEER.

USE FORMS FOR THE CONSTRUCTION OF THE BOTTOM SLAB.

IF REINFORCED CONCRETE PIPE IS SET IN BOTTOM SLAB OF BOX, ADD TO SLAB AS SHOWN ON STD. NO. 840.00.

USE TYPE "E", "F" AND "G" GRATES UNLESS OTHERWISE INDICATED.

FOR 8'-0" IN HEIGHT OR LESS USE 6" WALLS AND BOTTOM SLAB. OVER 8'-0" TO 15'-0" IN HEIGHT USE 8" WALLS AND BOTTOM SLAB. ADJUST QUANTITIES ACCORDINGLY.

CONSTRUCT WITH PIPE CROWNS MATCHING.

CHAMFER ALL EXPOSED CORNERS 1".

DRAWING NOT TO SCALE.

STATE OF NORTH CAROLINA DEPT. OF TRANSPORTATION DIVISION OF HIGHWAYS RALEIGH, N.C. — 1-12

ENGLISH STANDARD DRAWING FOR **CONCRETE CATCH BASIN** 12" THRU 54" PIPE

SHEET 1 OF 2 — **840.02**

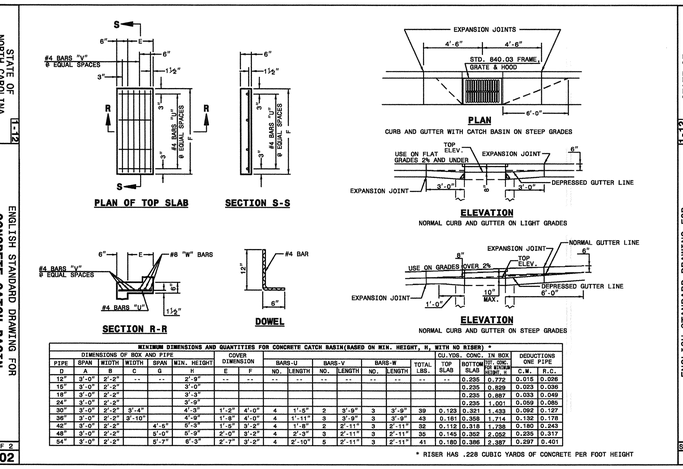

MINIMUM DIMENSIONS AND QUANTITIES FOR CONCRETE CATCH BASIN(BASED ON MIN. HEIGHT, H, WITH NO RISER)

DIMENSIONS OF BOX AND PIPE							OVER DIMENSION		BARS-U		BARS-V		BARS-W		TOTAL	CU.YDS. CONC. IN BOX			DEDUCTIONS ONE PIPE	
PIPE	SPAN	WIDTH	WIDTH	SPAN	MIN.	HEIGHT			NO.	LENGTH	NO.	LENGTH	NO.	LENGTH	LBS.	TOP SLAB	BOTTOM SLAB	TOT. OF BOTTOM SLAB	C.W.	R.C.
D	A	B			H		E	F												
12"	3'-0"	2'-2"	-	-	2'-9"		-	-	-	-	-	-	-	-	-	-	0.295	0.772	0.015	0.026
15"	3'-0"	2'-2"		0	3'-0"												0.235	0.829	0.033	0.036
18"	3'-0"	2'-2"			3'-3"												0.235	0.887	0.033	0.049
24"	3'-0"	2'-2"			3'-9"												0.235	1.001	0.059	0.086
30"	3'-0"	2'-2"	3'-4"		4'-3"		1'-2"	4'-0"	4	1'-5"	2	3'-9"	3	3'-9"	39	0.123	0.321	1.433	0.092	0.127
36"	3'-0"	2'-2"	3'-10"		4'-9"		1'-8"	4'-0"	4	1'-11"	3	3'-9"	3	3'-9"	43	0.161	0.358	1.714	0.132	0.178
42"	3'-0"	2'-2"		4'-5"	5'-3		1'-5"	3'-2"	4	1'-8"	2	2'-11"	3	2'-11"	52	0.112	0.318	1.798	0.180	0.243
48"	3'-0"	2'-2"		5'-0"	5'-9"		2'-0"	3'-2"	4	2'-3"	3	2'-11"	3	2'-11"	55	0.145	0.352	2.052	0.235	0.317
54"	3'-0"	2'-2"		5'-7"	6'-3"		2'-7"	3'-2"	4	2'-10"	3	2'-11"	3	2'-11"	41	0.180	0.386	2.387	0.297	0.401

* RISER HAS .228 CUBIC YARDS OF CONCRETE PER FOOT HEIGHT

STATE OF NORTH CAROLINA DEPT. OF TRANSPORTATION DIVISION OF HIGHWAYS RALEIGH, N.C. — 1-12

ENGLISH STANDARD DRAWING FOR **CONCRETE CATCH BASIN** 12" THRU 54" PIPE

SHEET 2 OF 2 — **840.02**

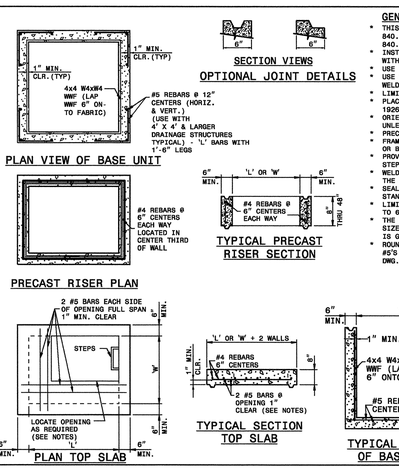

GENERAL NOTES:

- THIS PRECAST BOX MAY BE USED FOR THE FOLLOWING STANDARDS: 840.04, 840.05, 840.14, 840.15, 840.31, 840.32, 840.34, 840.35, 840.36 AND 840.41.
- INSTALL AND PAY FOR PRECAST DRAINAGE STRUCTURES IN ACCORDANCE WITH NCDOT STANDARD SPECIFICATION SECTION 840.
- USE 4000 PSI MINIMUM COMPRESSIVE STRENGTH CONCRETE.
- USE ASTM A615 GRADE 60 REINFORCING STEEL. USE ASTM A185 WELDED WIRE FABRIC (WWF).
- LIMIT MAXIMUM DEPTH TO TOP OF BOTTOM SLAB TO 15'-0".
- PLACE LIFT HOLES OR PINS IN ACCORDANCE WITH OSHA STANDARD 1926.704.
- ORIENT STRUCTURES SO THAT CORNERS WILL NOT BE CUT OR MODIFIED UNLESS ALLOWED BY DETAIL IN PLANS.
- PRECAST ALL ELEMENTS TO MEET ASTM C913.
- FRAME AND GRATE HEIGHT MAY BE ADJUSTED WITH CONCRETE OR BRICK IN ACCORDANCE WITH STANDARD 840.25.
- PROVIDE PRECAST STRUCTURES OVER 4'-0" IN DEPTH WITH STEPS 12" ON CENTERS IN ACCORDANCE WITH STD. NO. 840.66.
- WELDED WIRE FABRIC MAY BE SUBSTITUTED FOR REBAR IF THE SAME MIN. AREA OF STEEL IS PROVIDED.
- SEAL JOINTS WITH AN APPROVED SEALANT (SEE SECTION 840 OF NCDOT STANDARD SPECIFICATIONS.
- LIMIT MAXIMUM STRUCTURE SIZE INSIDE CLEAR DIMENSIONS TO 6'-0" X 6'-0".
- THE OUTSIDE PIPE DIAMETER PLUS 2" IS THE MINIMUM STRUCTURE SIZE OR THE OPENING REQUIRED FOR GRATE AND FRAME WHICHEVER IS GREATER.
- ROUND MANHOLE MAY BE USED IN LIEU OF SQUARE PROVIDED 2 EXTRA #5'S ARE PLACED ON EVERY SIDE NOT ADJACENT TO A WALL. SEE STD. DWG. 840.34 FOR MANHOLE INSTALLATION.

STATE OF NORTH CAROLINA DEPT. OF TRANSPORTATION DIVISION OF HIGHWAYS RALEIGH, N.C. — 1-12

ENGLISH STANDARD DRAWING FOR **TRAFFIC BEARING PRECAST DRAINAGE STRUCTURE**

SHEET 1 OF 1 — **840.46**

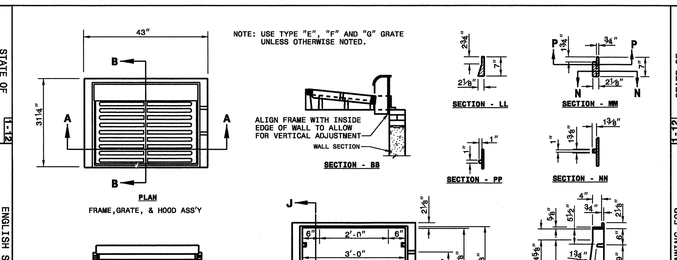

STATE OF NORTH CAROLINA DEPT. OF TRANSPORTATION DIVISION OF HIGHWAYS RALEIGH, N.C. — 1-12

ENGLISH STANDARD DRAWING FOR **FRAME, GRATES, AND HOOD** FOR USE ON STANDARD CATCH BASIN

SHEET 1 OF 2 — **840.03**

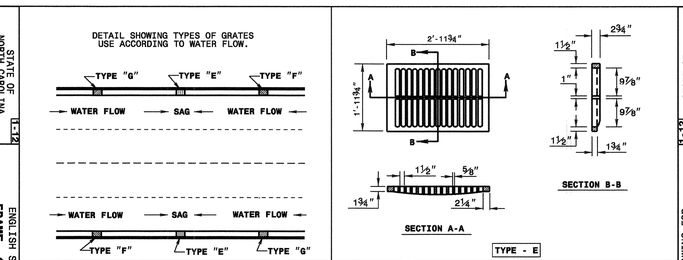

STATE OF NORTH CAROLINA DEPT. OF TRANSPORTATION DIVISION OF HIGHWAYS RALEIGH, N.C. — 1-12

ENGLISH STANDARD DRAWING FOR **FRAME, GRATES, AND HOOD** FOR USE ON STANDARD CATCH BASIN

SHEET 2 OF 2 — **840.03**

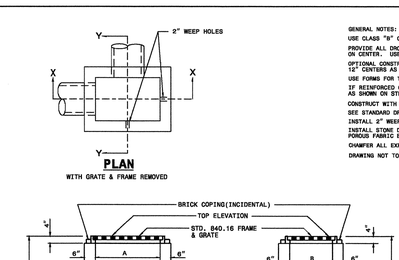

GENERAL NOTES:

USE CLASS "B" CONCRETE THROUGHOUT.

PROVIDE ALL DROP INLETS OVER 3'-6" IN DEPTH WITH STEPS 12" ON CENTER. USE STEPS WHICH COMPLY WITH STD. DRAWING 840.66.

OPTIONAL CONSTRUCTION - MONOLITHIC POUR 3" KEYWAY OR #4 BAR DOWELS AT 12" CENTERS AS DIRECTED BY THE ENGINEER.

USE FORMS FOR THE CONSTRUCTION OF THE BOTTOM SLAB.

IF REINFORCED CONCRETE PIPE IS SET IN BOTTOM SLAB OF BOX, ADD TO SLAB AS SHOWN ON STD. NO. 840.00.

CONSTRUCT WITH PIPE CROWNS MATCHING.

SEE STANDARD DRAWING 840.25 FOR ATTACHMENT OF FRAMES AND GRATES NOT SHOWN.

INSTALL 2" WEEPHOLES AS DIRECTED BY THE ENGINEER.

INSTALL STONE DRAINS, OF A MINIMUM OF 1 CUBIC FOOT OF NO. 78M STONE IN A POROUS FABRIC BAG OR WRAP, AT EACH WEEP HOLE OR AS DIRECTED BY THE ENGINEER.

CHAMFER ALL EXPOSED CORNERS 1".

DRAWING NOT TO SCALE.

DIMENSIONS AND QUANTITIES FOR DROP INLET(BASED ON MIN. HEIGHT, H)

DIMENSIONS OF BOX & PIPE				CUBIC YARDS CONC. IN BOX			DEDUCTIONS FOR ONE PIPE	
PIPE	SPAN	WIDTH	MIN. HEIGHT	BOTTOM SLAB	WALL PER FT. HT.	TOTAL BOTTOM SLAB FOR MINIMUM HEIGHT	C.W.	R.C.
D	A	B	H					
12"	3'-0"	2'-0"	2'-0"	0.222	0.222	0.592	0.015	0.026
15"	/	/	2'-3"	/	/	0.648	0.033	0.036
18"	/	/	2'-6"	/	/	0.703	0.033	0.049
24"	/	/	3'-0"	/	/	0.814	0.059	0.085
30"	3'-0"	2'-0"	3'-6"	0.222	0.222	0.925	0.092	0.127

STATE OF NORTH CAROLINA DEPT. OF TRANSPORTATION DIVISION OF HIGHWAYS RALEIGH, N.C. — 1-12

ENGLISH STANDARD DRAWING FOR **CONCRETE DROP INLET** 12" THRU 30" PIPE

SHEET 1 OF 1 — **840.14**

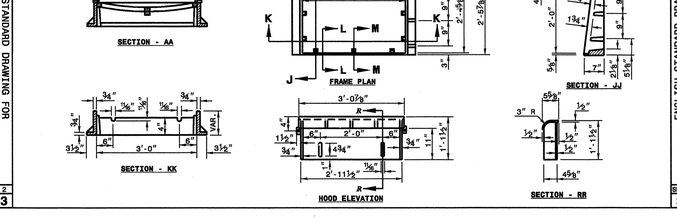

STATE OF NORTH CAROLINA DEPT. OF TRANSPORTATION DIVISION OF HIGHWAYS RALEIGH, N.C. — 1-12

ENGLISH STANDARD DRAWING FOR **DROP INLET FRAME AND GRATES** FOR USE WITH STD. DWG.S 840.14 AND 840.15

SHEET 1 OF 1 — **840.16**

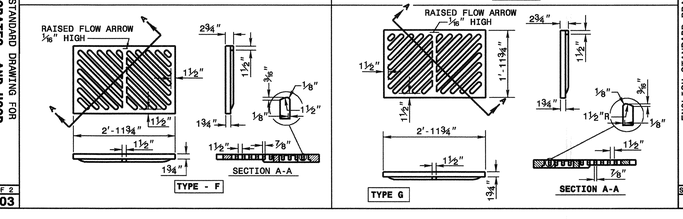

STATE OF NORTH CAROLINA DEPT. OF TRANSPORTATION DIVISION OF HIGHWAYS RALEIGH, N.C. — 1-12

ENGLISH STANDARD DRAWING FOR **ANCHORAGE FOR FRAMES** BRICK/CONCRETE/PRECAST CONCRETE

SHEET 1 OF 1 — **840.25**

NOTES:
INSTALL ALL STEPS PROTRUDING 4" FROM INSIDE FACE OF STRUCTURE WALL.
STEPS DIFFERING IN DIMENSIONS, CONFIGURATION, OR MATERIALS FROM THOSE SHOWN MAY ALSO BE USED PROVIDED THE CONTRACTOR HAS FURNISHED THE ENGINEER WITH DETAILS OF THE PROPOSED STEPS AND HAS RECEIVED WRITTEN APPROVAL FROM THE ENGINEER FOR THE USE OF SUCH STEPS.

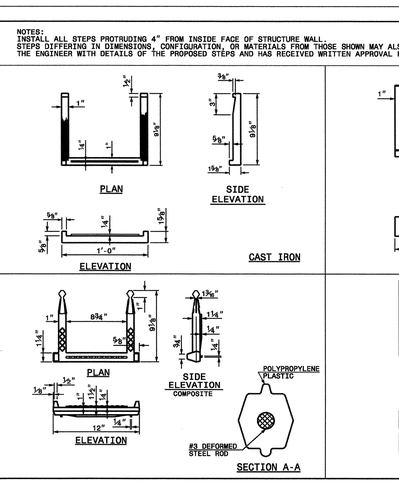

STATE OF NORTH CAROLINA DEPT. OF TRANSPORTATION DIVISION OF HIGHWAYS RALEIGH, N.C. — 1-12

ENGLISH STANDARD DRAWING FOR **DRAINAGE STRUCTURE STEPS**

SHEET 1 OF 1 — **840.66**

REV.NO.	DESCRIPTIONS	DATE
A	CITY OF WILMINGTON TRC SUBMITTAL	04/08/2015

REVISIONS

FINAL DRAWINGS DO NOT USE FOR CONSTRUCTION

SEAL — NORTH CAROLINA PROFESSIONAL SEAL CIVIL 035107 ENGINEER NICHOLAS J. LAURITIN 04/08/15

McKIM&CREED
243 North Front Street
Wilmington, North Carolina 28401
Phone: (910)343-1048, Fax: (910)251-8282
License: F-1222
www.mckimcreed.com

NASH — NORTH AMERICA SEKISUI HOUSE, LLC

RIVERLIGHTS™ by Newland COMMUNITIES

RIVERLIGHTS MARINA VILLAGE

STORM DRAINAGE DETAILS

DATE:	08APR15
MCE PROJ. #	2735-0124
DRAWN	EEM
DESIGNED	EEM
CHECKED	RMC
PROJ. MGR.	NJL

SCALE — HORIZONTAL: -- VERTICAL: --

M&C FILE NUMBER CG-501

DRAWING NUMBER 21 — 21 OF28

STATUS: FINAL DESIGN — NOT FOR CONSTRUCTION

REVISION A