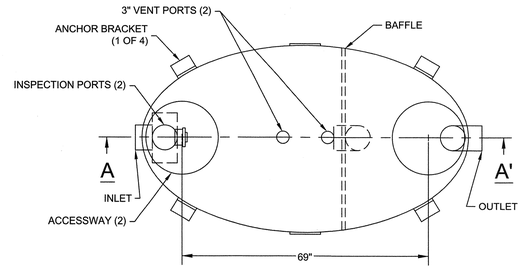

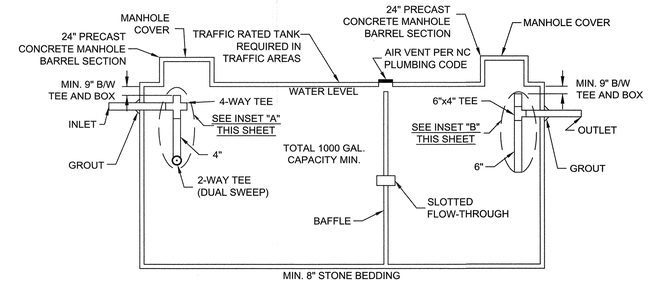

CONCRETE GREASE INTERCEPTOR

NOT TO SCALE

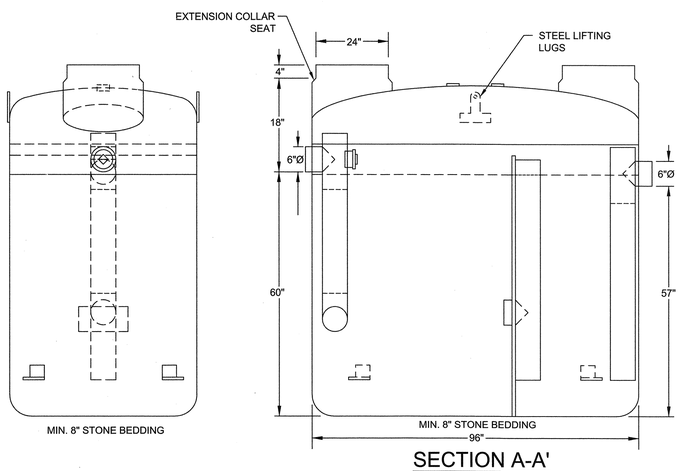

SECTION A-A'

NOTES:
1. FOR GRAVITY APPLICATIONS ONLY
2. MIN. THICKNESS: 1/4" WALL AND 3/8" TOP AND BOTTOM BOWLS
3. STANDARD PIPE STUBS ARE SOCKET SDR 35 PVC
4. EXTENSION COLLARS SHALL BE CAULKED WITH SIKAFLEX OR EQUIVALENT FOR WATERTIGHT SEAL
5. FOLLOW MANUFACTURE'S SPECS FOR TRAFFIC OR PEDESTRIAN LOADING

FIBERGLASS GREASE INTERCEPTOR

NOT TO SCALE

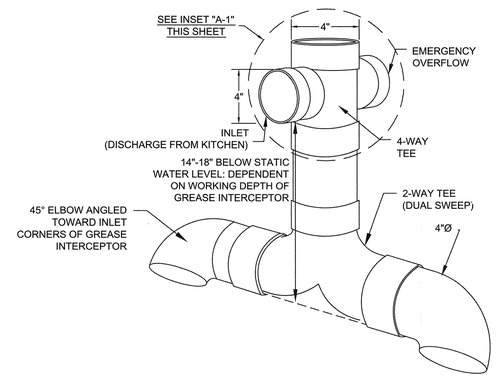

GREASE INTERCEPTOR INSET "A" 4" SANITARY TEE

NOT TO SCALE

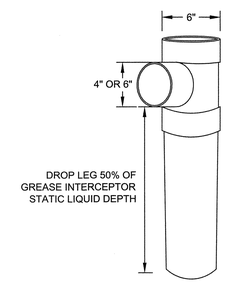

GREASE INTERCEPTOR INSET "B" 6" X 6" X 4" OUTLET SANITARY TEE

NOT TO SCALE

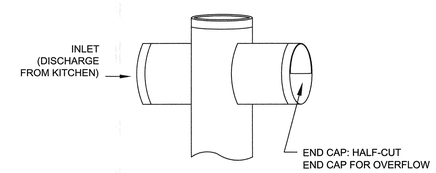

GREASE INTERCEPTOR INSET "A-1" EMERGENCY OVERFLOW CLOSE-UP

NOT TO SCALE

GENERAL NOTES:

1. NO EXCAVATED MATERIAL SHALL BE PLACED IN ANY STREAM, DITCH OR DRAINAGE-WAY.
2. THE CONTRACTOR IS RESPONSIBLE FOR LOCATING ALL UNDERGROUND UTILITIES BEFORE ANY CONSTRUCTION BEGINS.
3. THE CONTRACTOR IS RESPONSIBLE FOR TEMPORARY SEDIMENT AND EROSION CONTROL MEASURES WHILE CONSTRUCTION IS IN PROGRESS.
4. THE CONTRACTOR IS RESPONSIBLE FOR STABILIZATION OF ALL DISTURBED AREAS.
5. THE CONTRACTOR IS RESPONSIBLE FOR LAY DOWN & STOCKPILE AREAS (TO ARRANGE AND INSURE COMPLIANCE WITH ALL LOCAL AND STATE REGULATIONS).

THE DETAILS SHOWN HEREON SUPERCEDE CFPUA WRITTEN TECHNICAL SPECIFICATIONS VERSIONS 1.00 - 1.04

REV:	DESCRIPTION:	DATE:

NORTH CAROLINA PROFESSIONAL CIVIL 035107 ENGINEER NICHOLAS J. LAURETTA
04/08/15

CFPUA SANITARY SEWER

STANDARD DETAILS

CAPE FEAR PUBLIC UTILITY AUTHORITY
235 GOVERNMENT CENTER DRIVE
WILMINGTON, NC 28403
OFFICE: (910)332-6560
Stewardship. Sustainability. Service.

DATE: 1/9/12
SCALE: N/A
DRAWN BY: CFPUA
CHECKED BY: CFPUA
PROJECT NO. :

SHEET NO: SSD-4